Name : _____ Score : _____

# Reflect the Shapes

Sheet 1

Graph the image of each shape after the given reflection.

1) Reflection across the line x = 4

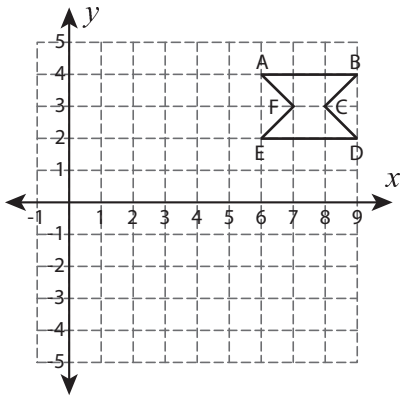


2) Reflection across the line y = x

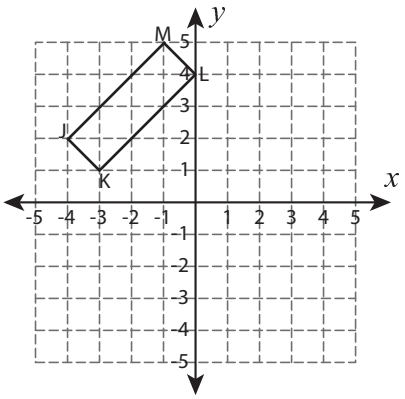


3) Reflection across the line y = –1

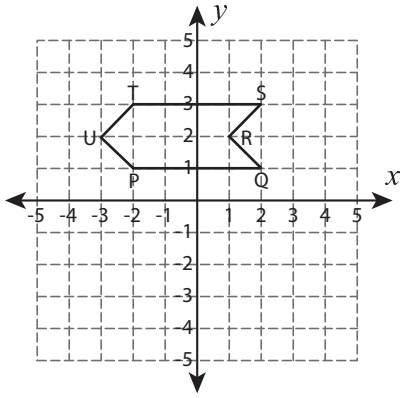


4) Reflection across the line x = –3

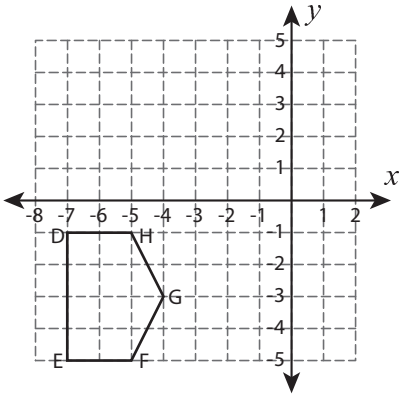


5) Reflection across the line x = 2

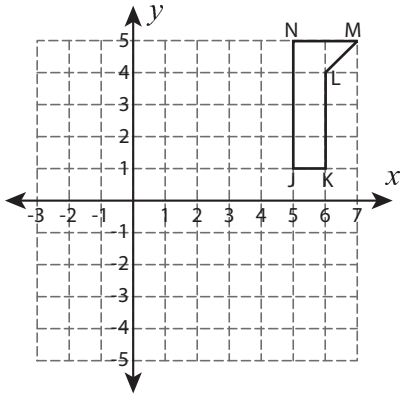


6) Reflection across the line y = 5

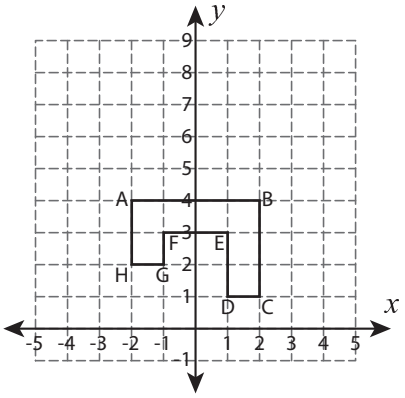


7) Reflection across the line y = –4

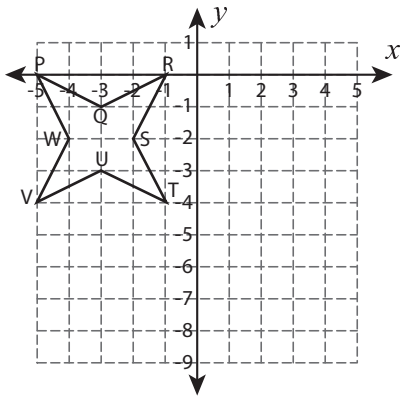


8) Reflection across the x-axis

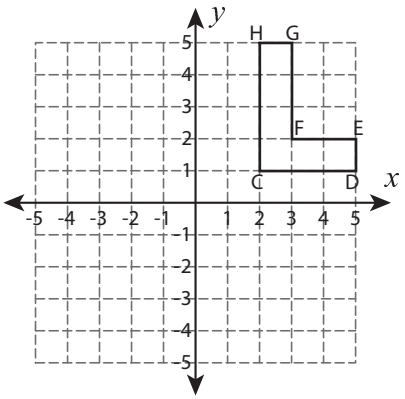

Name : _____ Score : _____

**Answer key**

# Reflect the Shapes

Sheet 1

Graph the image of each shape after the given reflection.

1) Reflection across the line x = 4

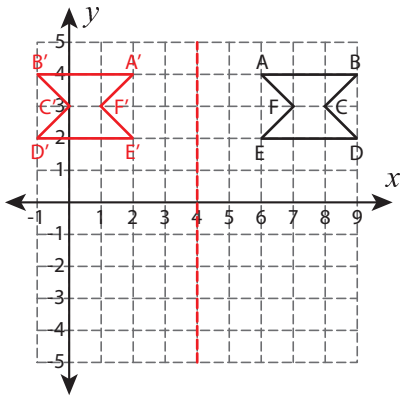


2) Reflection across the line y = x

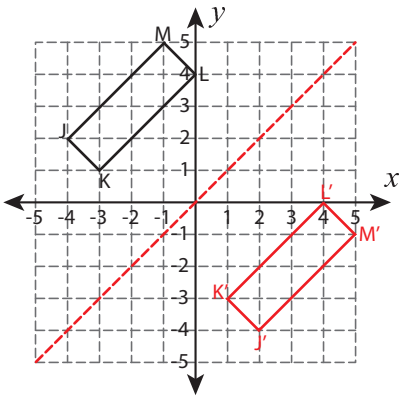


3) Reflection across the line y = –1

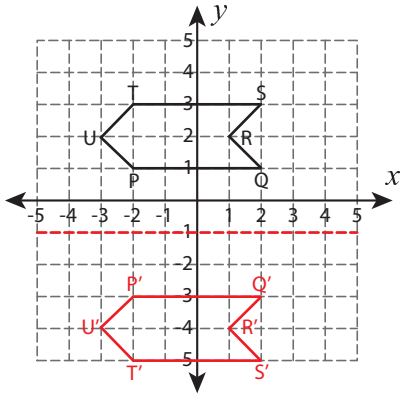


4) Reflection across the line x = –3

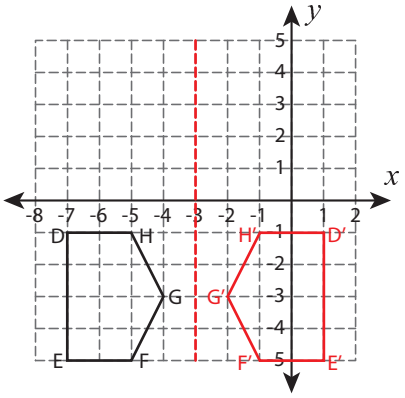


5) Reflection across the line x = 2

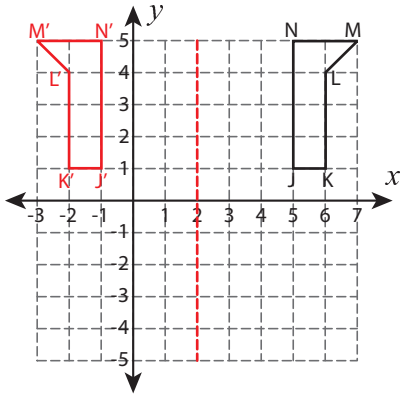


6) Reflection across the line y = 5

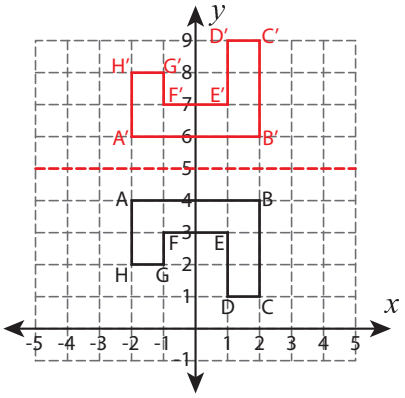


7) Reflection across the line y = –4

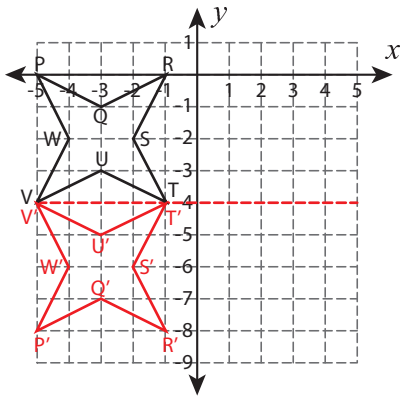


8) Reflection across the x-axis

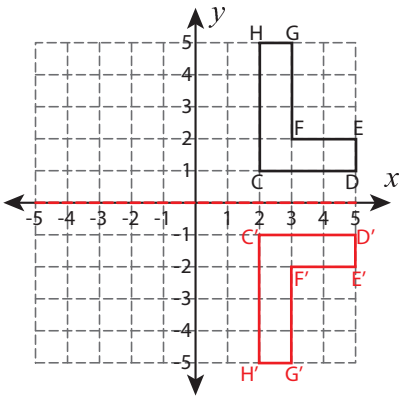

Name : _____ Score : _____

# Reflect the Shapes

Sheet 2

Graph the image of each shape after the given reflection.

1) Reflection across the line y = –x

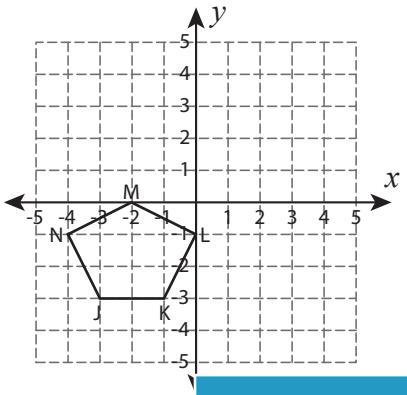


2) Reflection across the line x = 3

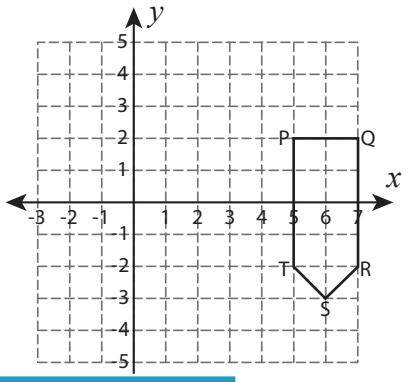


3) Reflection across the line y = 4

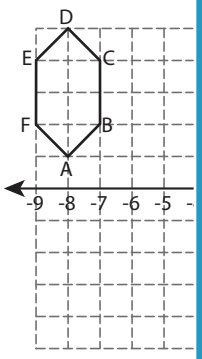


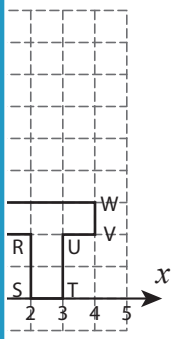


5) Reflection across the line x = –5

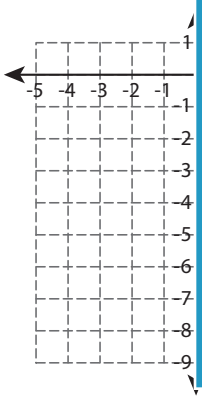

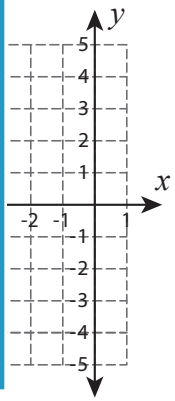


7) Reflection across the line x = 1

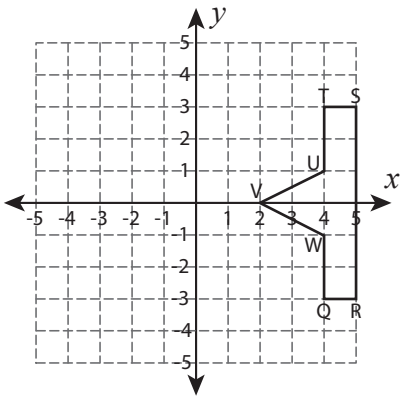


8) Reflection across the line y = 2

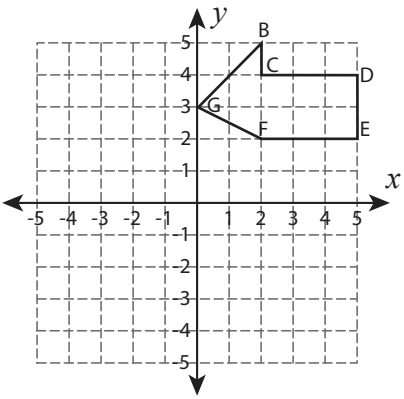


PREVIEW

Access the largest collection of worksheets for just $19.95 per year!

Members, please log in to download this worksheet.

Log in

Not a member? Please sign up to gain complete access.

Sign up

www.mathworksheets4kids.com

Name : _____ Score : _____

**Answer key**

Sheet 2

# Reflect the Shapes

Graph the image of each shape after the given reflection.

1) Reflection across the line y = –x

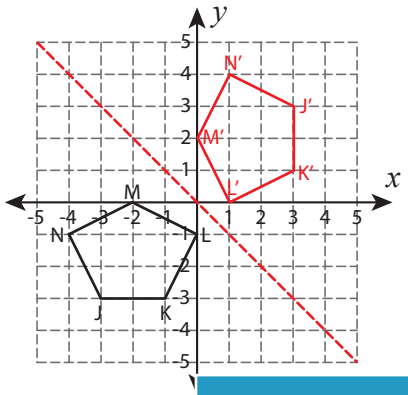


2) Reflection across the line x = 3

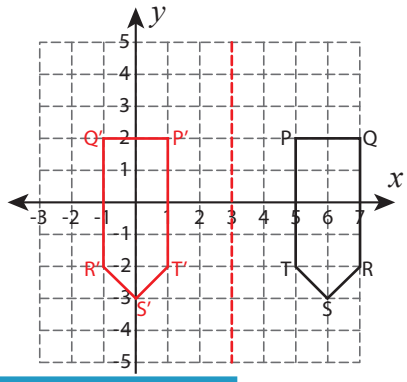


3) Reflection across line y = 4

5) Reflection across line x = –5

PREVIEW

Access the largest collection of worksheets for just $19.95 per year!

Members, please log in to download this worksheet.

Log in

Not a member? Please sign up to gain complete access.

Sign up

www.mathworksheets4kids.com


7) Reflection across the line x = 1

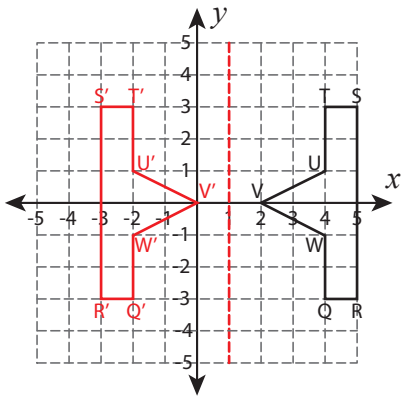


8) Reflection across the line y = 2

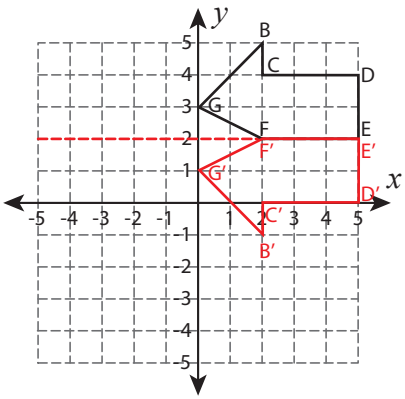

Name : _____ Score : _____

# Reflect the Shapes

Sheet 3

Graph the image of each shape after the given reflection.

1) Reflection across the line x = –4

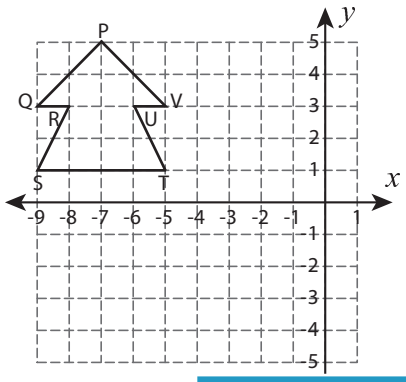


2) Reflection across the line y = 1

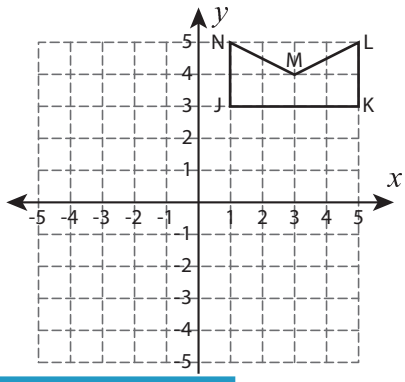


3) Reflection across line x = 6

5) Reflection across line y = –5

7) Reflection across the line y = 3

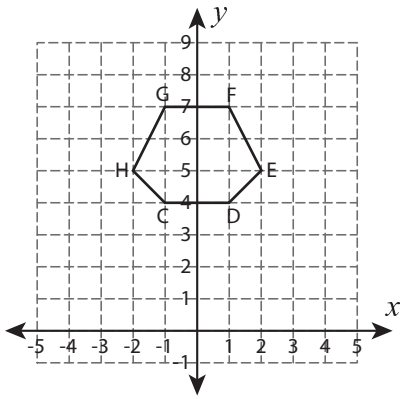


8) Reflection across the line x = –2

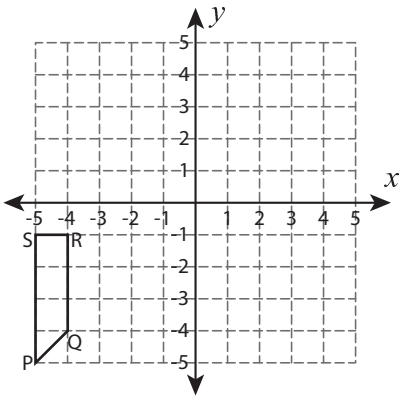


PREVIEW

Access the largest collection of worksheets for just $19.95 per year!

Members, please log in to download this worksheet.

Log in

Not a member? Please sign up to gain complete access.

Sign up

www.mathworksheets4kids.com

Name : _____ Score : _____

**Answer key**

# Reflect the Shapes

Sheet 3

Graph the image of each shape after the given reflection.

1) Reflection across the line x = –4

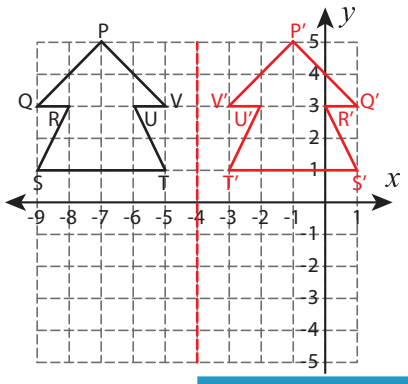


2) Reflection across the line y = 1

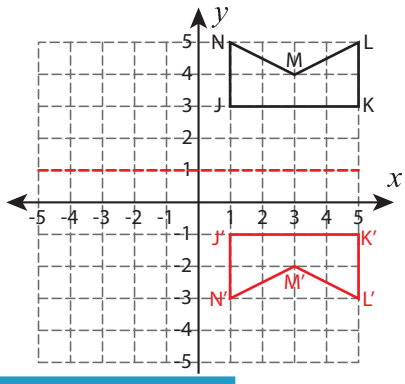


3) Reflection across the line x = 6

5) Reflection across the line y = –5

7) Reflection across the line y = 3

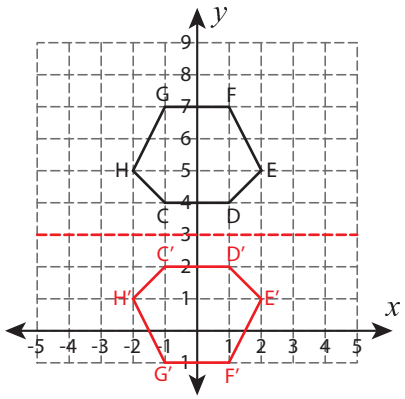


8) Reflection across the line x = –2

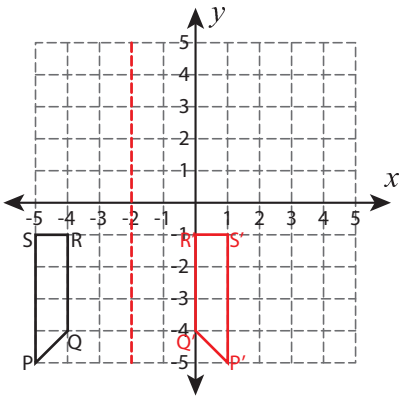



PREVIEW

Access the largest collection of worksheets for just $19.95 per year!

Members, please log in to download this worksheet.

Log in

Not a member? Please sign up to gain complete access.

Sign up

www.mathworksheets4kids.com