Name : _____

Area - Compound Shapes

L1S1

Find the area of the shaded region in each figure. Round your answer to 2 decimal places if required. (Use $\pi = 3.14$)

1)

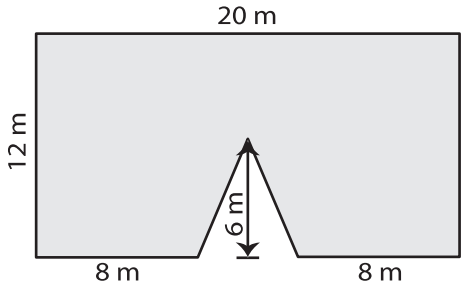

Area = _____

2)

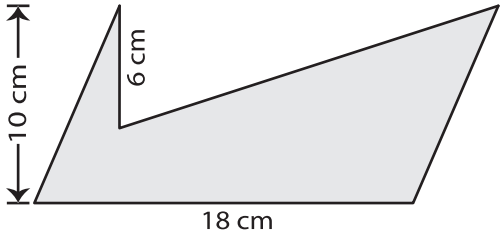

Area = _____

3)

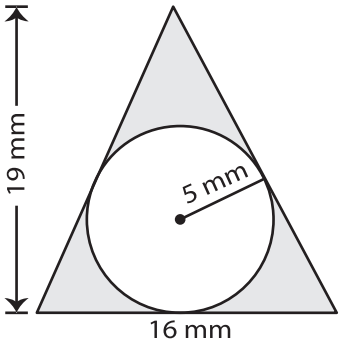

Area = _____

4)

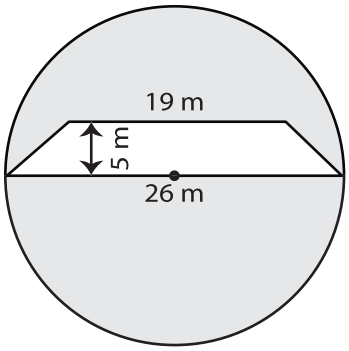

Area = _____

5)

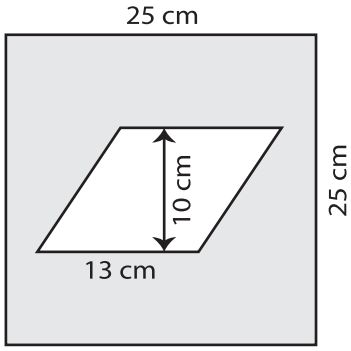

Area = _____

6)

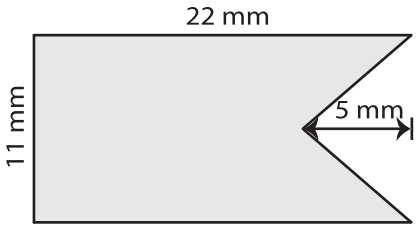

Area = _____