Name : _____ Score : _____

L2MS1

Surface Area - Prism

Find the surface area of each prism.(use π = 3.14)

1)

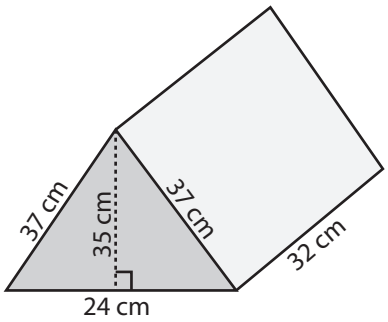

Surface Area = _____

2)

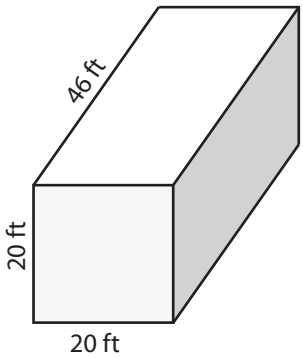

Surface Area = _____

3)

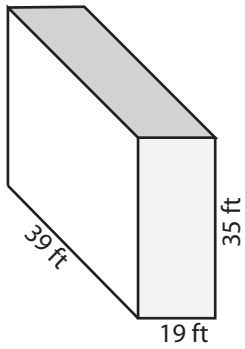

Surface Area = _____

4)

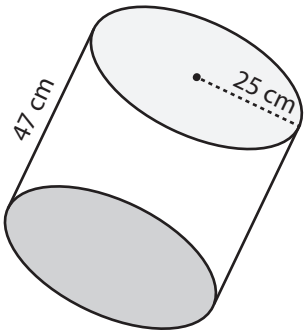

Surface Area = _____

5)

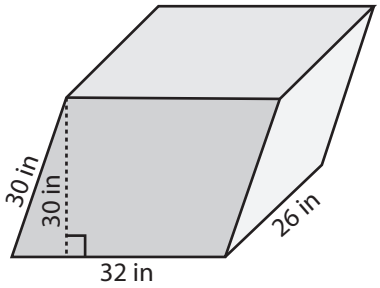

Surface Area = _____

6)

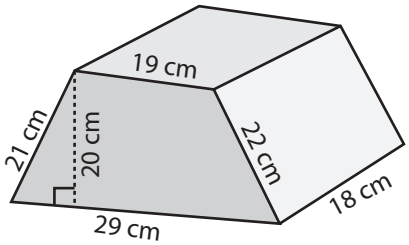

Surface Area = _____

7)

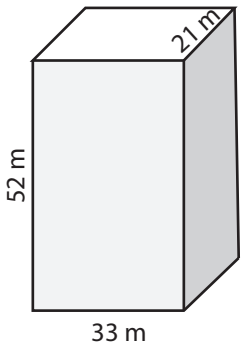

Surface Area = _____

8)

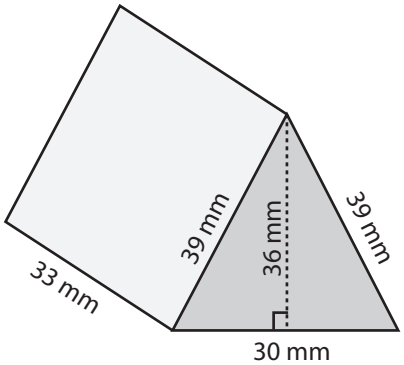

Surface Area = _____

9)

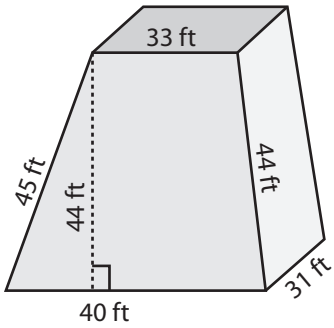

Surface Area = _____

Name : _____ Score : _____

Answer key

L2MS1

Surface Area - Prism

Find the surface area of each prism.(use π = 3.14)

1)

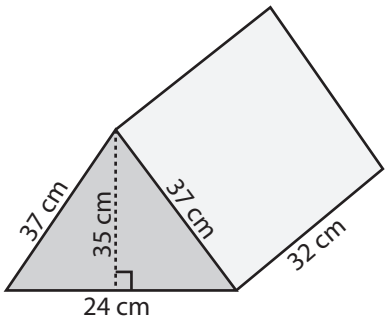

Surface Area = **3976 cm²**

2)

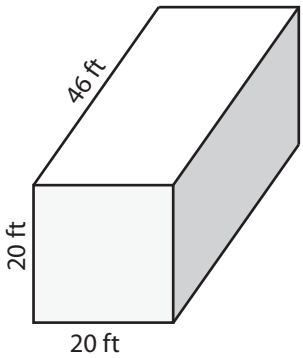

Surface Area = **4480 ft²**

3)

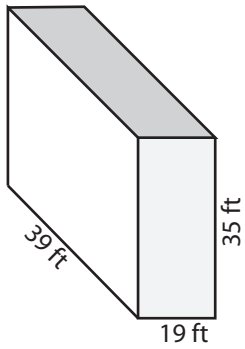

Surface Area = **5542 ft²**

4)

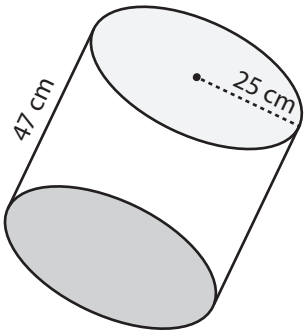

Surface Area = **11304 cm²**

5)

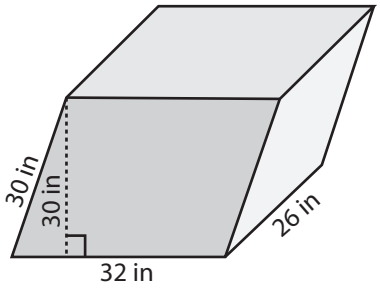

Surface Area = **5144 in²**

6)

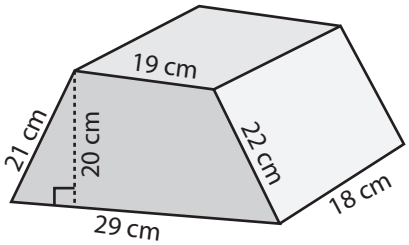

Surface Area = **2598 cm²**

7)

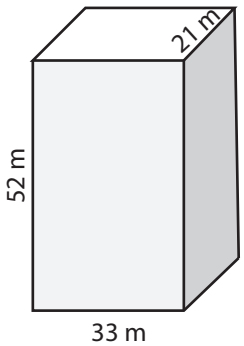

Surface Area = **7002 m²**

8)

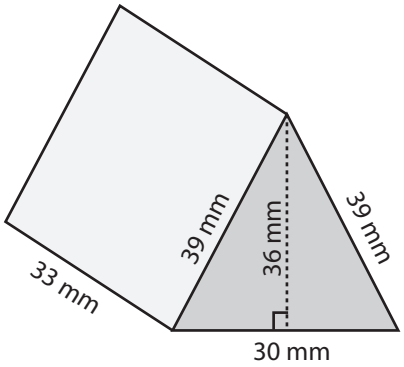

Surface Area = **4644 mm²**

9)

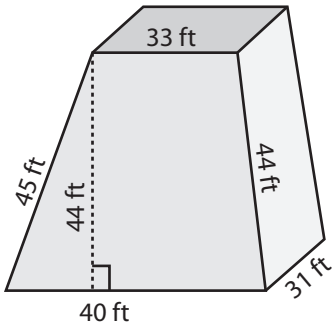

Surface Area = **8234 ft²**

Name : _____ Score : _____

L2MS2

Surface Area - Prism

Find the surface area of each prism.(use $\pi = 3.14$)

1)

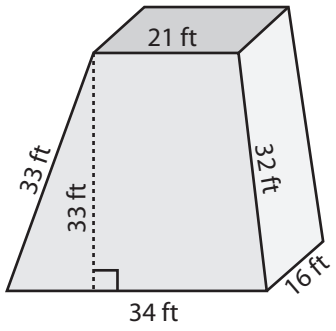

Surface Area = _____

2)

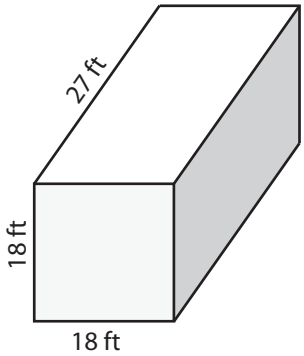

Surface Area = _____

3)

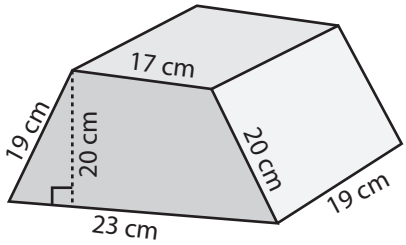

Surface Area = _____

4)

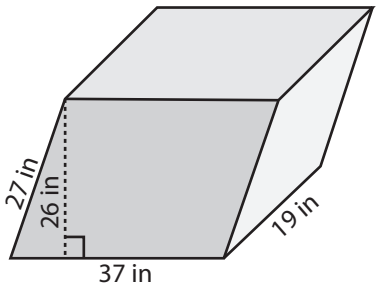

Surface Area = _____

5)

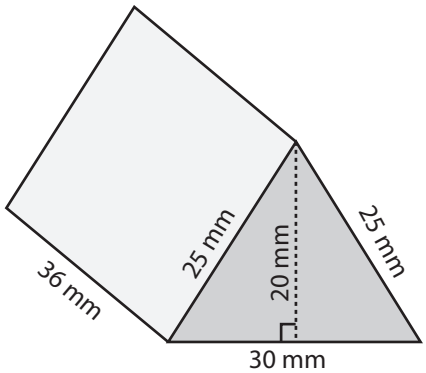

Surface Area = _____

6)

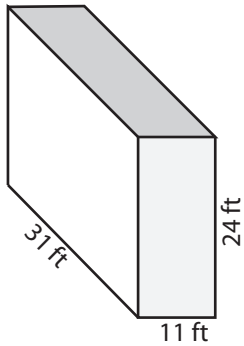

Surface Area = _____

7)

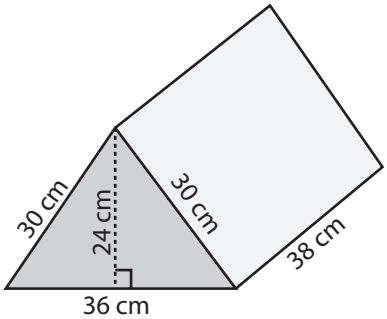

Surface Area = _____

8)

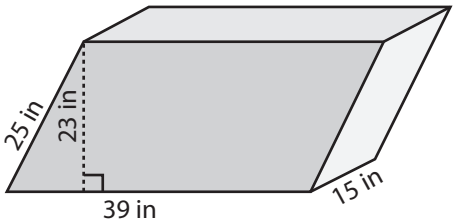

Surface Area = _____

9)

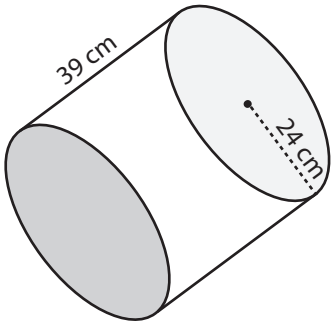

Surface Area = _____

Name : _____ Score : _____

Answer key

L2MS2

Surface Area - Prism

Find the surface area of each prism.(use π = 3.14)

1)

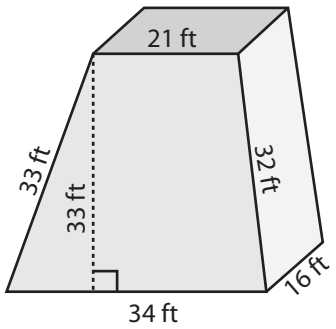

Surface Area = **3735 ft²**

2)

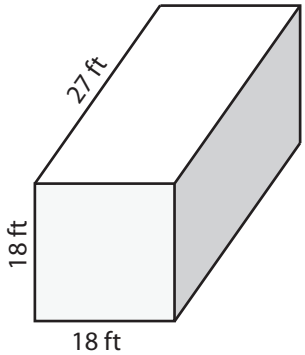

Surface Area = **2592 ft²**

3)

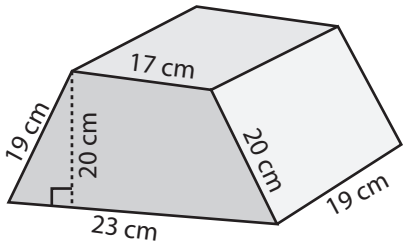

Surface Area = **2301 cm²**

4)

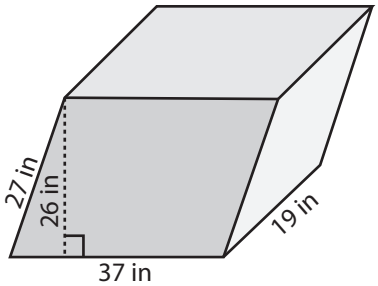

Surface Area = **4356 in²**

5)

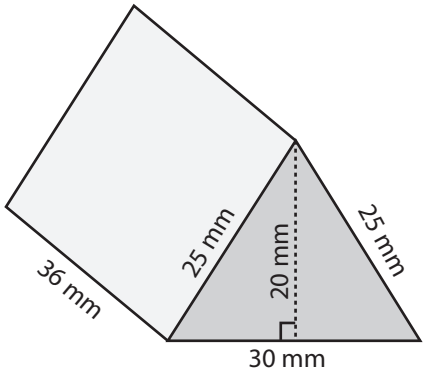

Surface Area = **3480 mm²**

6)

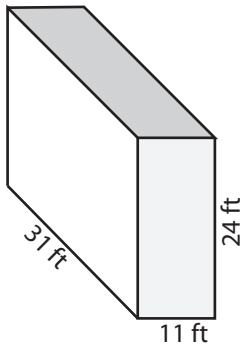

Surface Area = **2698 ft²**

7)

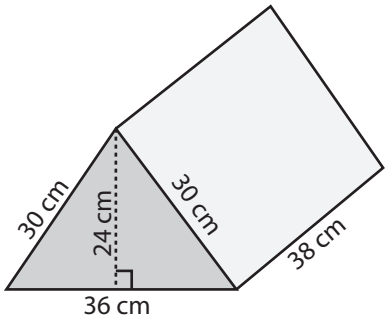

Surface Area = **4512 cm²**

8)

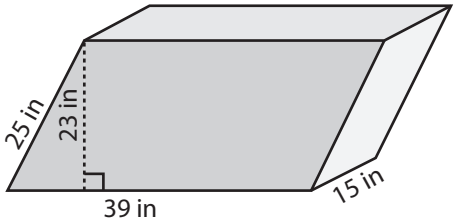

Surface Area = **3714 in²**

9)

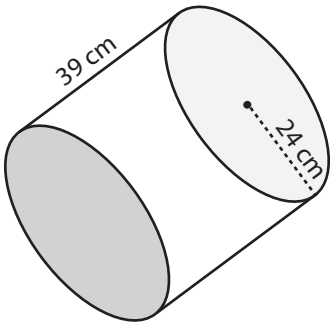

Surface Area = **9495.36 cm²**

Name : _____ Score : _____

L2MS3

Surface Area - Prism

Find the surface area of each prism.(use π = 3.14)

1)

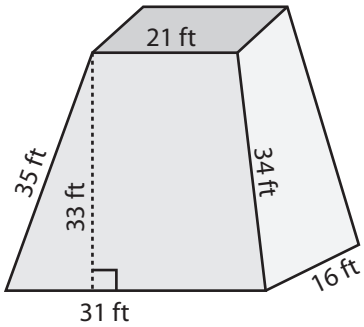

Surface Area = _____

2)

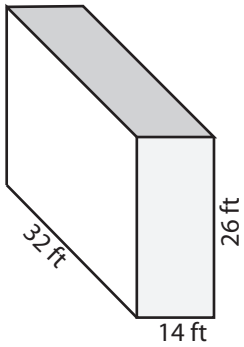

Surface Area = _____

3)

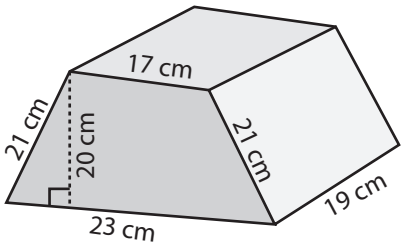

Surface Area = _____

4)

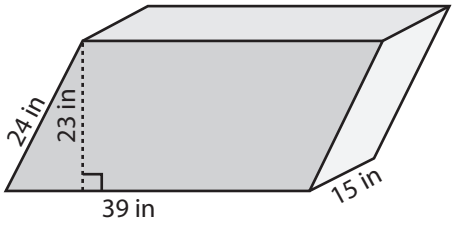

Surface Area = _____

5)

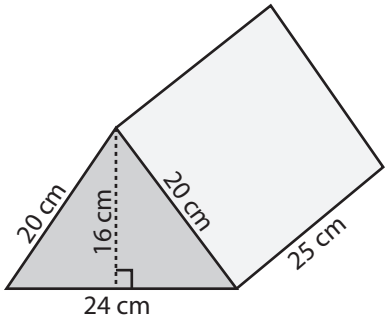

Surface Area = _____

6)

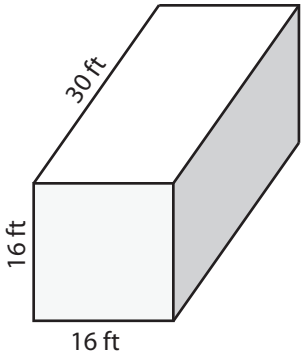

Surface Area = _____

7)

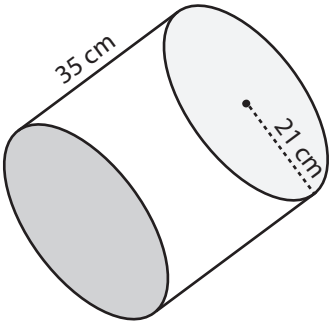

Surface Area = _____

8)

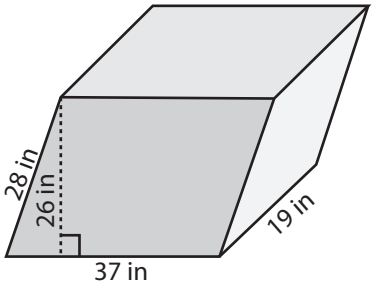

Surface Area = _____

9)

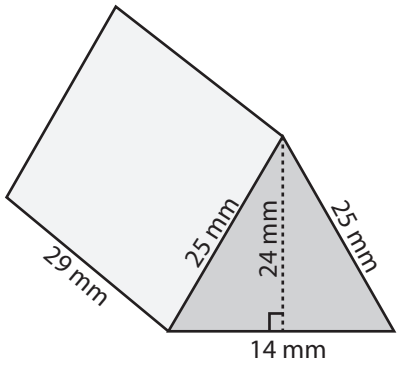

Surface Area = _____

Name : _____ Score : _____

Answer key

L2MS3

Surface Area - Prism

Find the surface area of each prism.(use $\pi = 3.14$)

1)

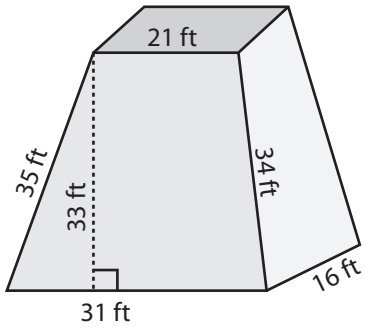

Surface Area = **3652 ft²**

2)

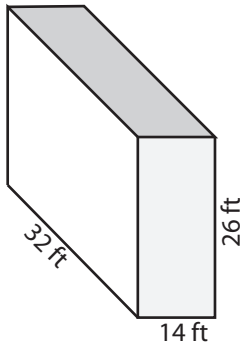

Surface Area = **3288 ft²**

3)

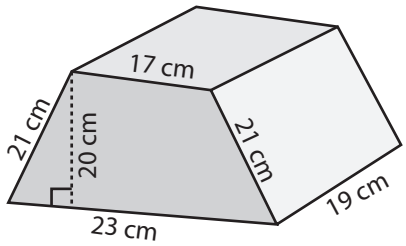

Surface Area = **2358 cm²**

4)

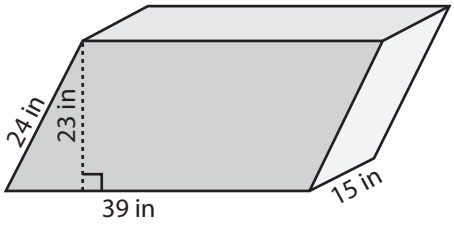

Surface Area = **3684 in²**

5)

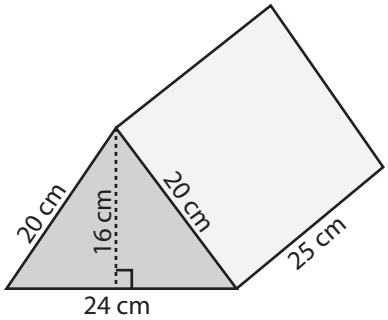

Surface Area = **1984 cm²**

6)

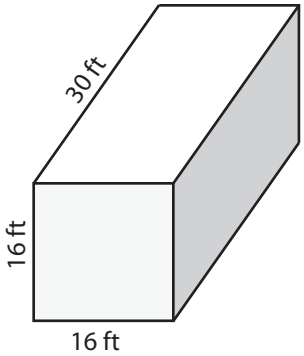

Surface Area = **2432 ft²**

7)

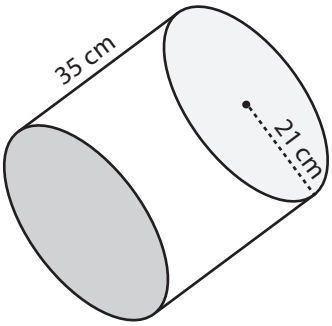

Surface Area = **7385.28 cm²**

8)

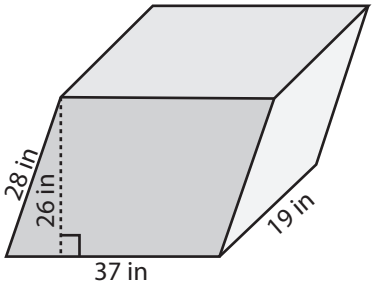

Surface Area = **4394 in²**

9)

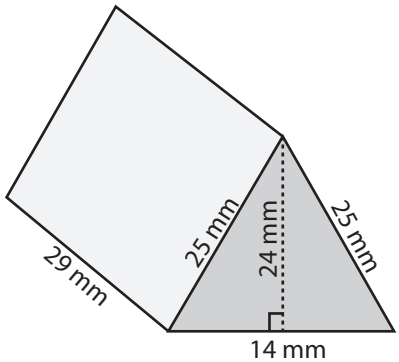

Surface Area = **2192 mm²**