Name : _____ Score : _____

DS1

Surface Area - Square Pyramid

Example:

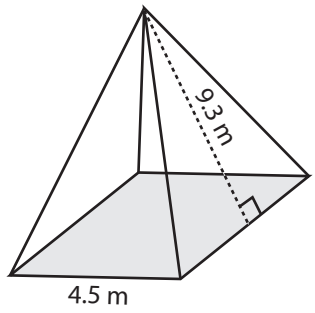

Surface area = base area + $\frac{1}{2}$ x perimeter x slant height

Base area = side x side = 4.5 x 4.5 = 20.25 m^2

Perimeter = 4 x side = 4 x 4.5 = 18 m

Surface area = 20.25 + $\frac{1}{2}$ x 18 x 9.3

= **103.95 m^2**

Find the surface area of each square pyramid.

1)

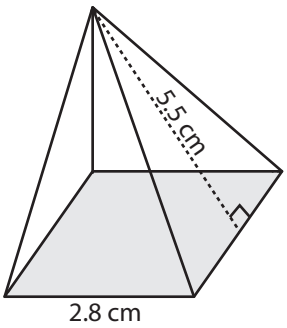

Surface Area = _____

2)

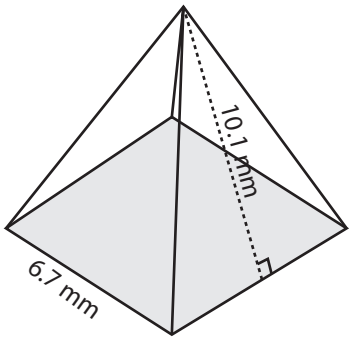

Surface Area = _____

3)

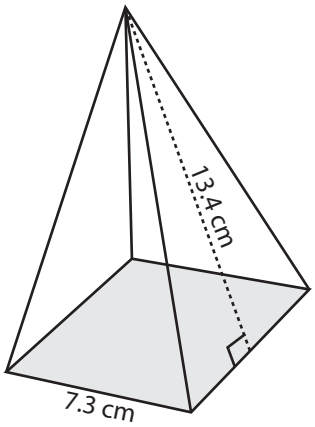

Surface Area = _____

4)

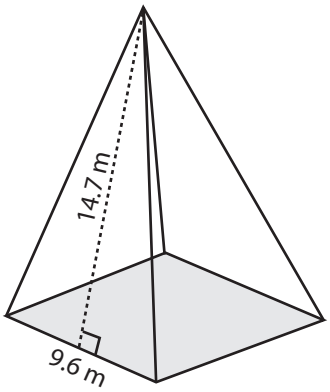

Surface Area = _____

5)

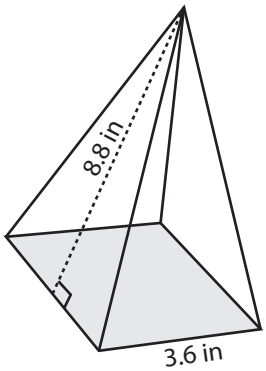

Surface Area = _____

6)

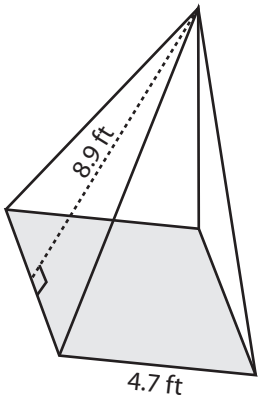

Surface Area = _____

Name : _____ Score : _____

Answer key

DS1

Surface Area - Square Pyramid

Example:

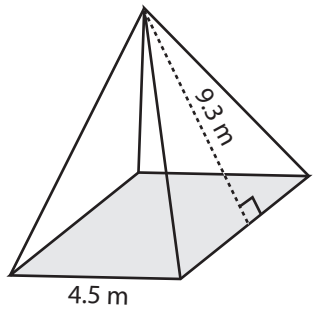

Surface area = base area + $\frac{1}{2}$ x perimeter x slant height

Base area = side x side = 4.5 x 4.5 = 20.25 m^2

Perimeter = 4 x side = 4 x 4.5 = 18 m

Surface area = 20.25 + $\frac{1}{2}$ x 18 x 9.3

= **103.95 m^2**

Find the surface area of each square pyramid.

1)

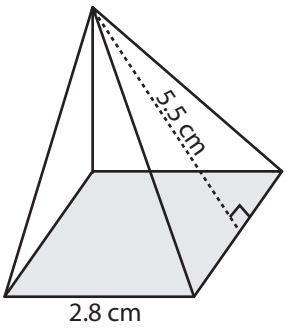

Surface Area = **38.64 cm^2**

2)

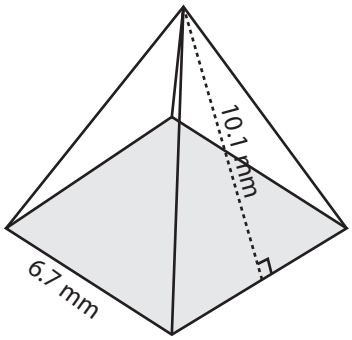

Surface Area = **180.23 mm^2**

3)

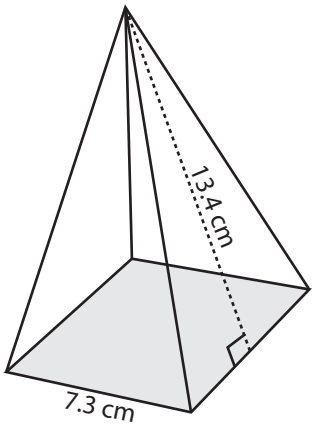

Surface Area = **248.93 cm^2**

4)

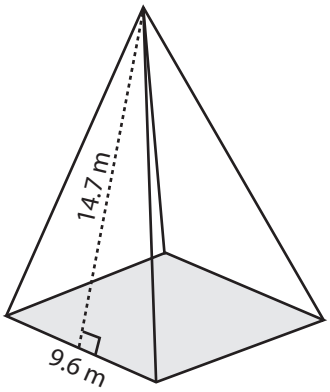

Surface Area = **374.4 m^2**

5)

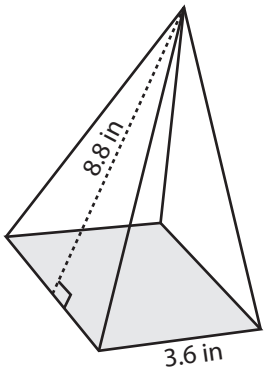

Surface Area = **76.32 in^2**

6)

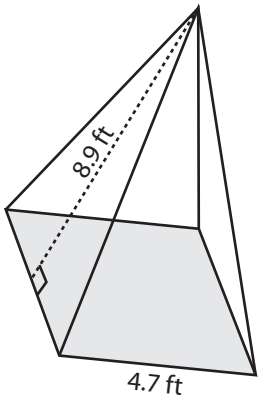

Surface Area = **105.75 ft^2**

Name : _____ Score : _____

DS2

Surface Area - Square Pyramid

Example:

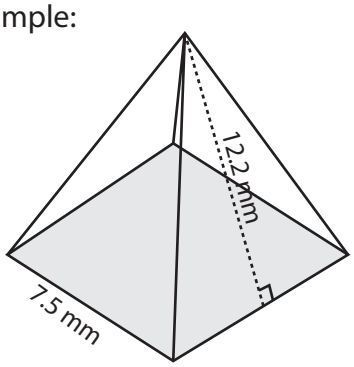

Surface area = base area + $\frac{1}{2}$ x perimeter x slant height

Base area = side x side = 56.25 mm^2

Perimeter = 4 x side = 30 mm

= 56.25 + $\frac{1}{2}$ x 30 x 12.2

= **239.25 mm^2**

Find the surface area of each square pyramid.

1)

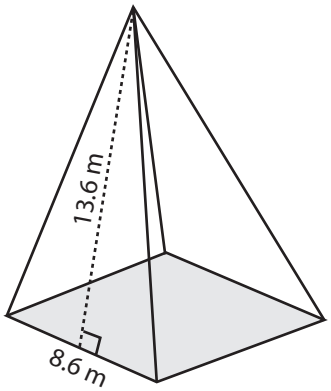

Surface Area = _____

2)

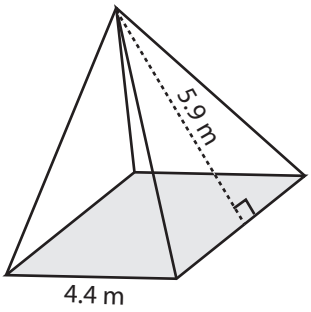

Surface Area = _____

3)

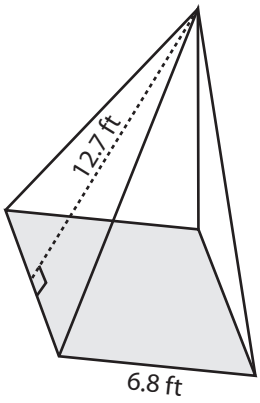

Surface Area = _____

4)

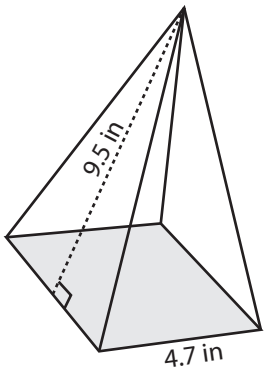

Surface Area = _____

5)

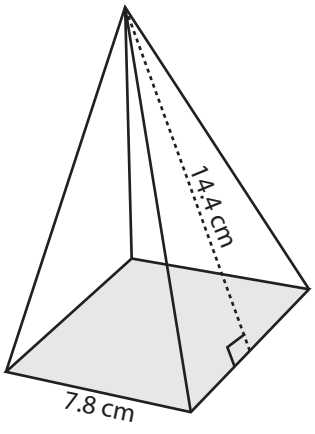

Surface Area = _____

6)

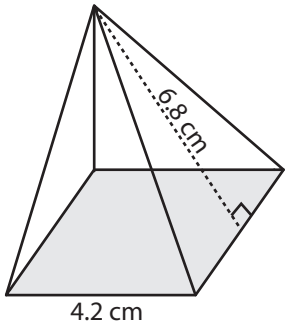

Surface Area = _____

Name : _____ Score : _____

Answer key

DS2

Surface Area - Square Pyramid

Example:

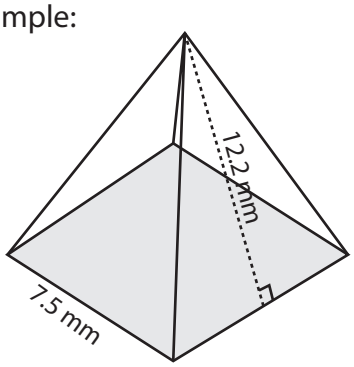

Surface area = base area + $\frac{1}{2}$ x perimeter x slant height

Base area = side x side = 56.25 mm^2

Perimeter = 4 x side = 30 mm

= 56.25 + $\frac{1}{2}$ x 30 x 12.2

= **239.25 mm^2**

Find the surface area of each square pyramid.

1)

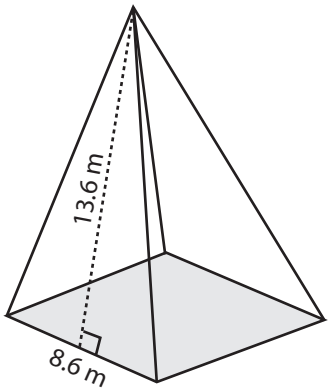

Surface Area = **307.88 m^2**

2)

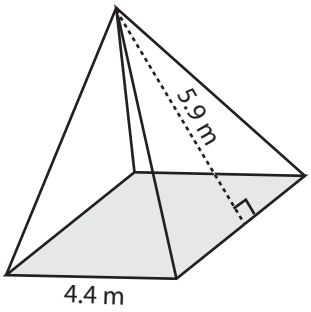

Surface Area = **71.28 m^2**

3)

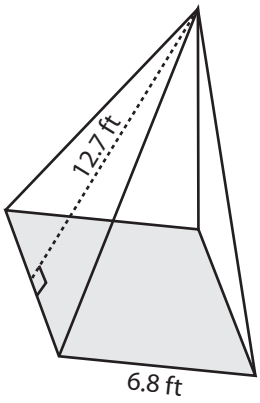

Surface Area = **218.96 ft^2**

4)

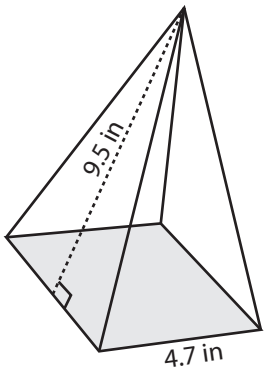

Surface Area = **111.39 in^2**

5)

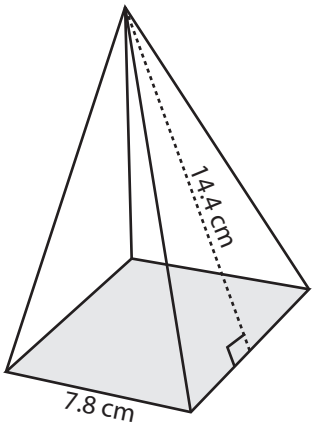

Surface Area = **285.48 cm^2**

6)

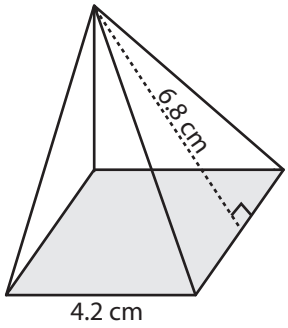

Surface Area = **74.76 cm^2**

Name : _____ Score : _____

DS3

Surface Area - Square Pyramid

Example:

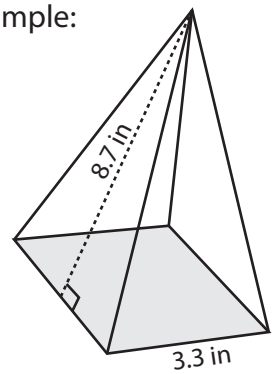

Surface area = base area + $\frac{1}{2}$ x perimeter x slant height

Base area = side x side = 3.3 x 3.3 = 10.89 in^2

Perimeter = 4 x side = 4 x 3.3 = 13.2 in

Surface area = 10.89 + $\frac{1}{2}$ x 13.2 x 8.7

= **68.31 in^2**

Find the surface area of each square pyramid.

1)

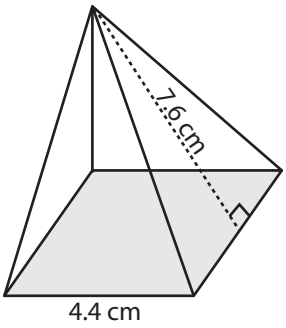

Surface Area = _____

2)

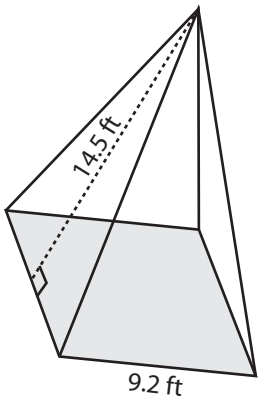

Surface Area = _____

3)

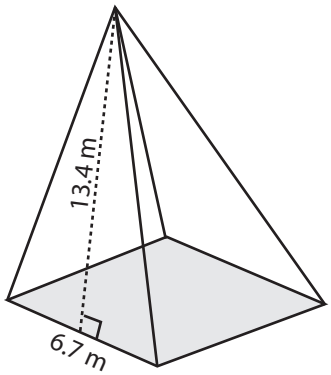

Surface Area = _____

4)

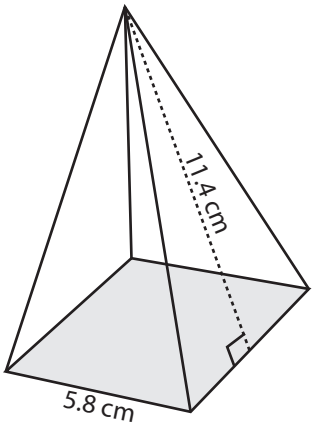

Surface Area = _____

5)

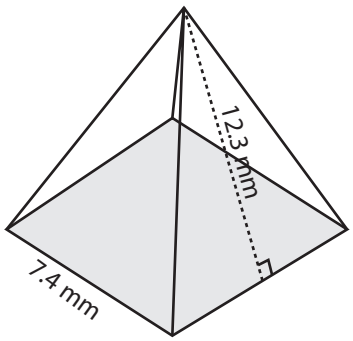

Surface Area = _____

6)

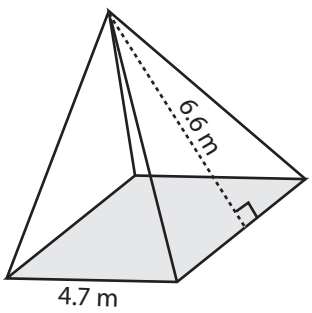

Surface Area = _____

Name : _____ Score : _____

Answer key

DS3

Surface Area - Square Pyramid

Example:

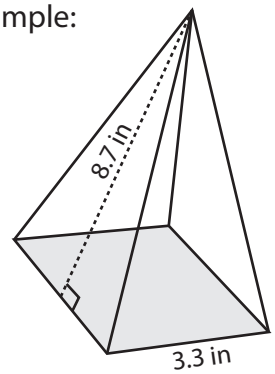

Surface area = base area + $\frac{1}{2}$ x perimeter x slant height

Base area = side x side = 3.3 x 3.3 = 10.89 in^2

Perimeter = 4 x side = 4 x 3.3 = 13.2 in

Surface area = 10.89 + $\frac{1}{2}$ x 13.2 x 8.7

= **68.31 in^2**

Find the surface area of each square pyramid.

1)

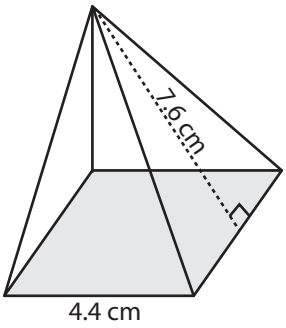

Surface Area = **86.24 cm^2**

2)

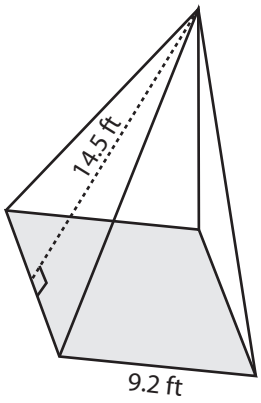

Surface Area = **351.44 ft^2**

3)

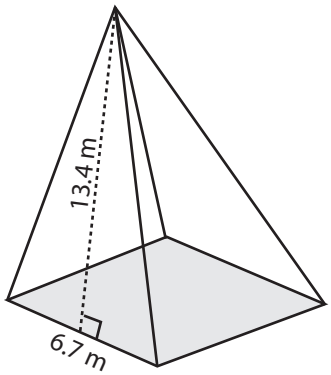

Surface Area = **224.45 m^2**

4)

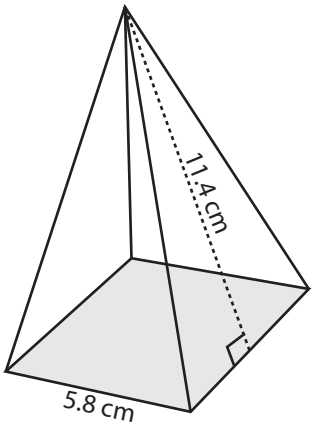

Surface Area = **165.88 cm^2**

5)

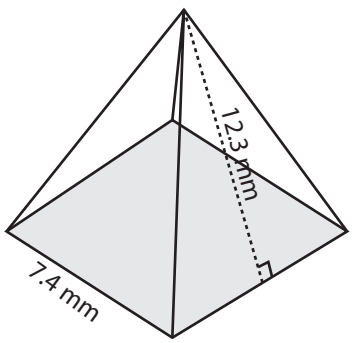

Surface Area = **236.8 mm^2**

6)

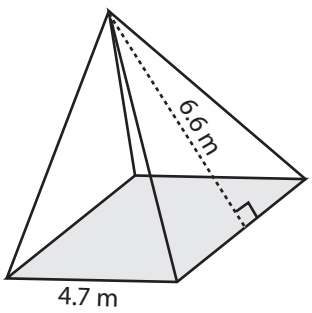

Surface Area = **84.13 m^2**